Annexure-2

INFORMATORY SIGN BOARD

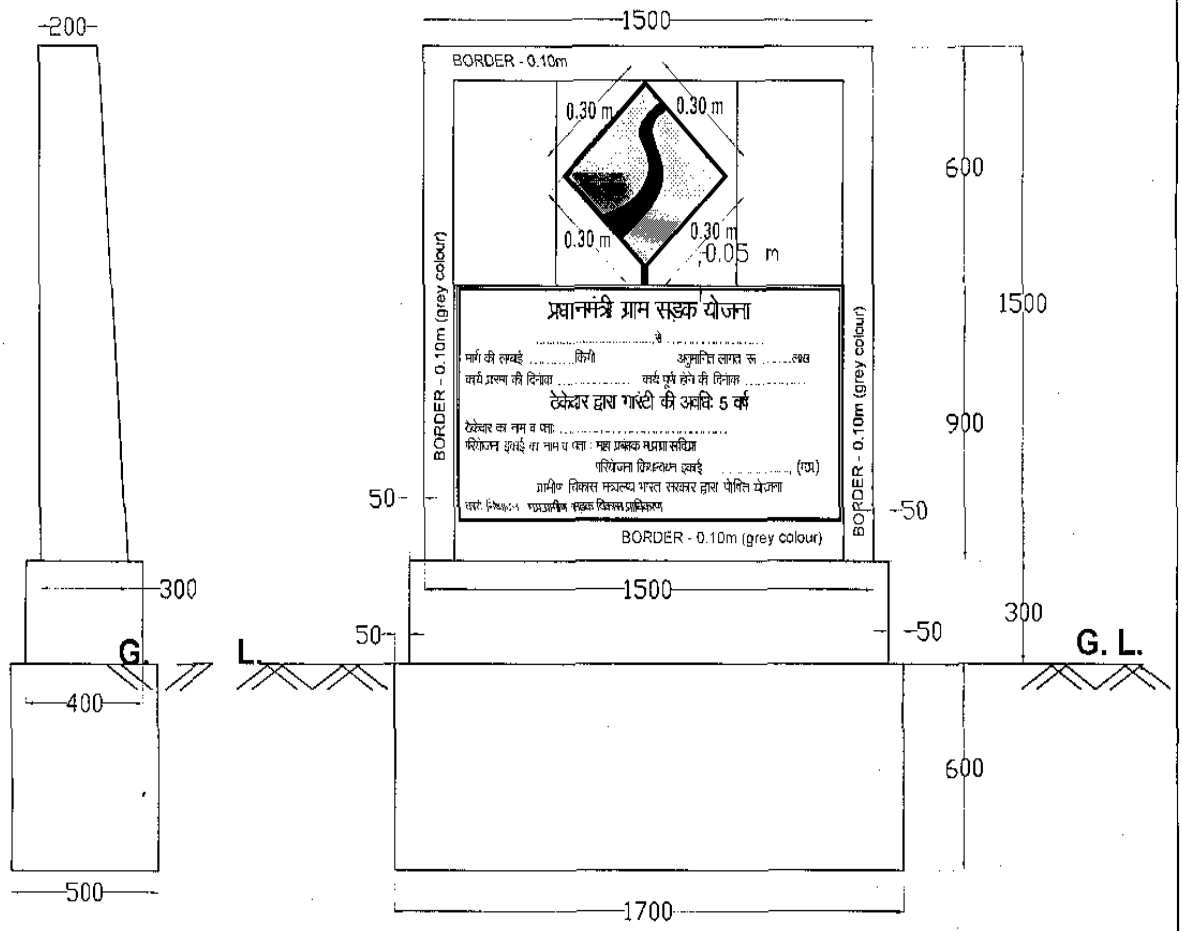

NOTE :-

1. NUMBER OF SIGN BOARD SHALL BE AS PER PMGSY GUIDELINES WITH SAME COLOUR, PATTERN & LANGUAGE.
2. MATTER OF SIGN BOARD SHALL BE PAINTED ON BOTH SIDES.
3. BOARD SHALL BE CASTED ON LEFT SIDE OF ROAD IN CEMENT CONCRETE 1:2.5:5 (M-15)
4. THIS BOARD SHALL BE CONSTRUCTED AT BOTH ENDS OF THE ROAD IN SUCH A WAY SO THAT IT DOES NOT CAUSE HINDERANCE FOR USERS.
5. ALL DIMENSIONS IN MM.

Annexure-3

INFORMATORY SIGN BOARD (REINFORCEMENT DETAILS)

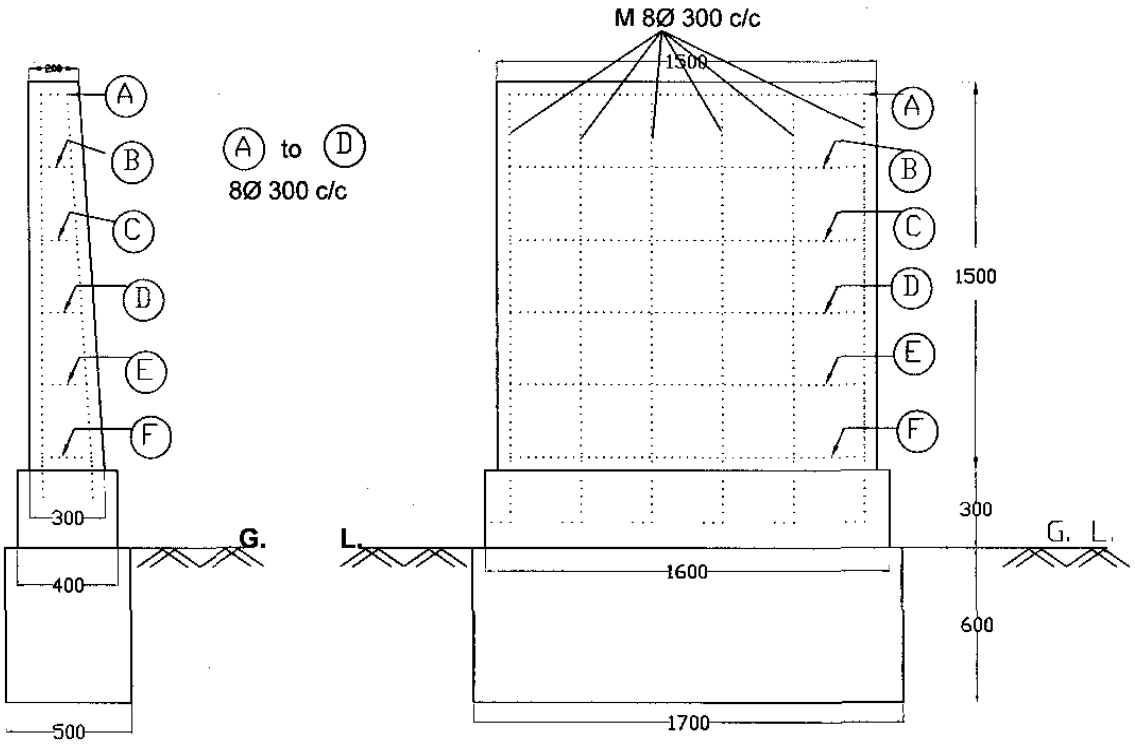

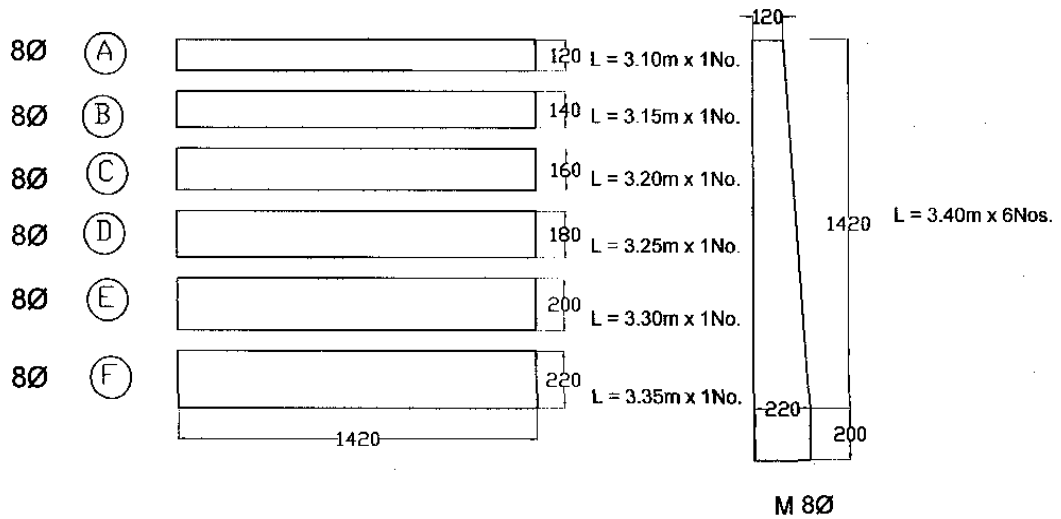

Annexure-4

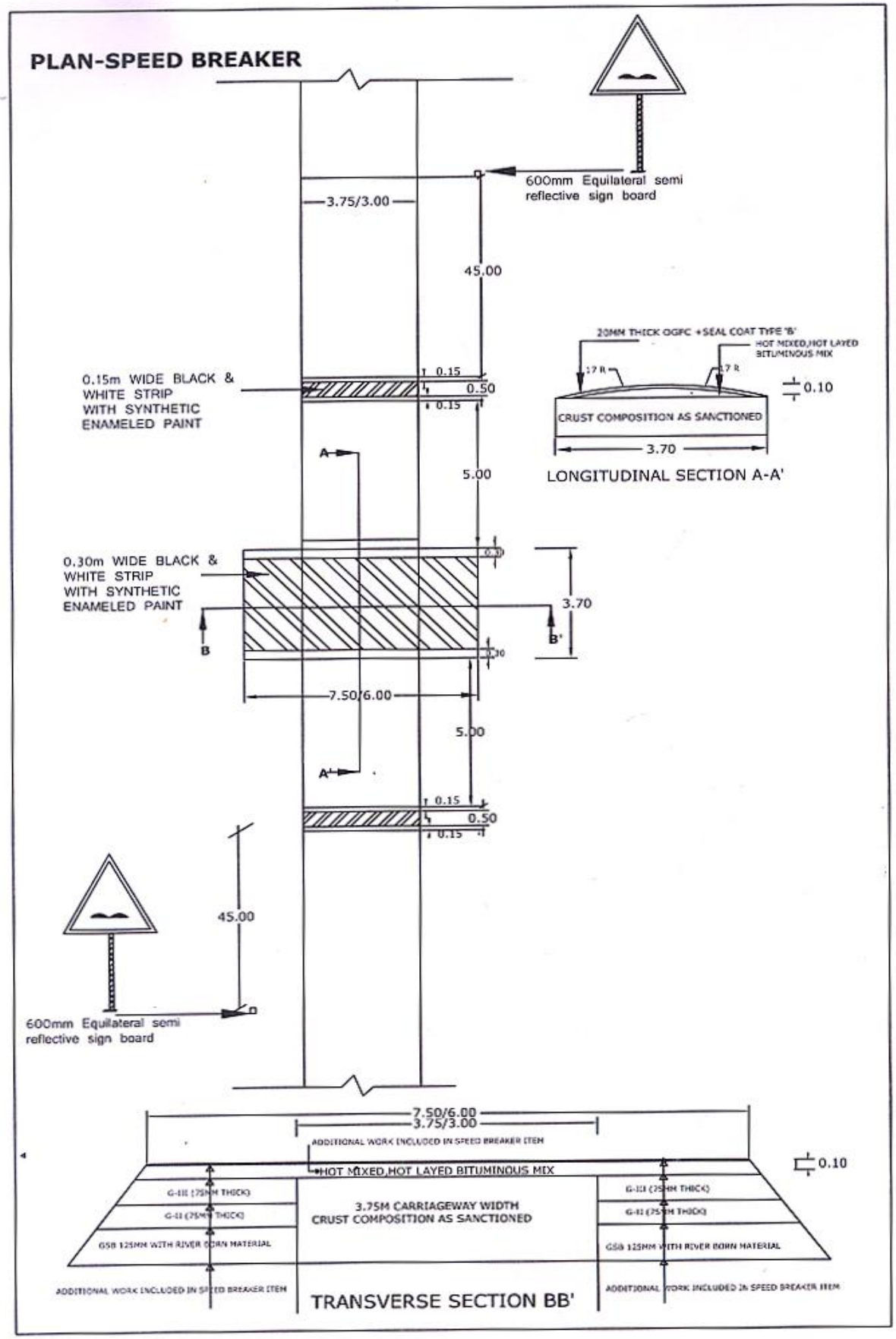
PLAN-SPEED BREAKER
600mm Equilateral semi reflective sign board
3.75/3.00
45.00
0.15m WIDE BLACK & WHITE STRIP WITH SYNTHETIC ENAMELED PAINT
0.15
0.50
0.15
20MM THICK OGFC +SEAL COAT TYPE 'B'
HOT MIXED,HOT LAYED BITUMINOUS MIX
0.10
CRUST COMPOSITION AS SANCTIONED
3.70
LONGITUDINAL SECTION A-A'
A
5.00
0.30m WIDE BLACK & WHITE STRIP WITH SYNTHETIC ENAMELED PAINT
3.70
B
B'
7.50/6.00
5.00
A'
0.15
0.50
0.15
45.00
600mm Equilateral semi reflective sign board
7.50/6.00
3.75/3.00
ADDITIONAL WORK INCLUDED IN SPEED BREAKER ITEM
HOT MIXED,HOT LAYED BITUMINOUS MIX
0.10
G-III (75MM THICK)
G-II (75MM THICK)
GSB 125MM WITH RIVER BORN MATERIAL
3.75M CARRIAGEWAY WIDTH
CRUST COMPOSITION AS SANCTIONED
ADDITIONAL WORK INCLUDED IN SPEED BREAKER ITEM
TRANSVERSE SECTION BB'